ROVECONCEPTS

Refined Luxury Living

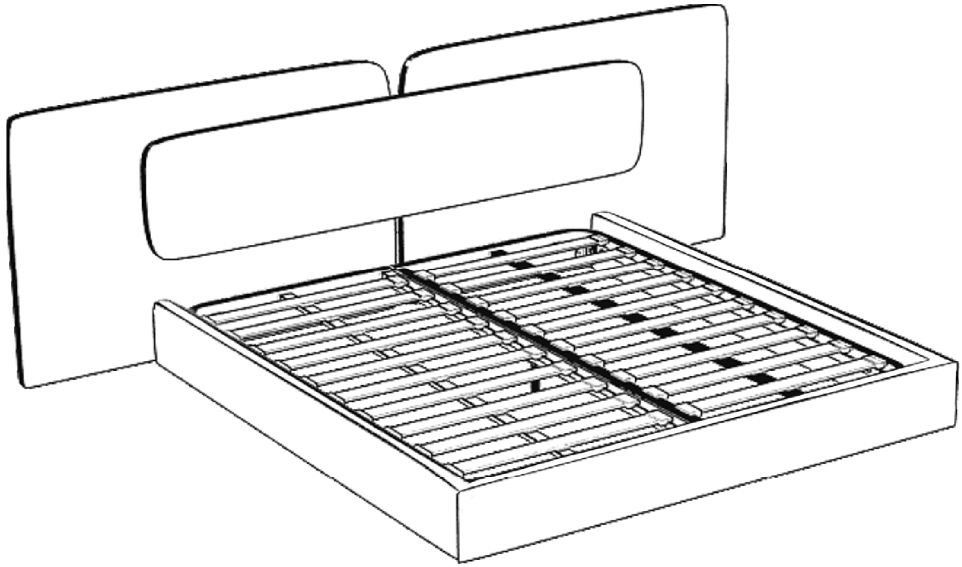

ANGELO BED - FULL / QUEEN
ASSEMBLY INSTRUCTIONS

HARDWARE

A

x1

B

x1

C

x2

D

x6

E

x6

F

x6

G

x1

H

x6

I

x2

STEP 1

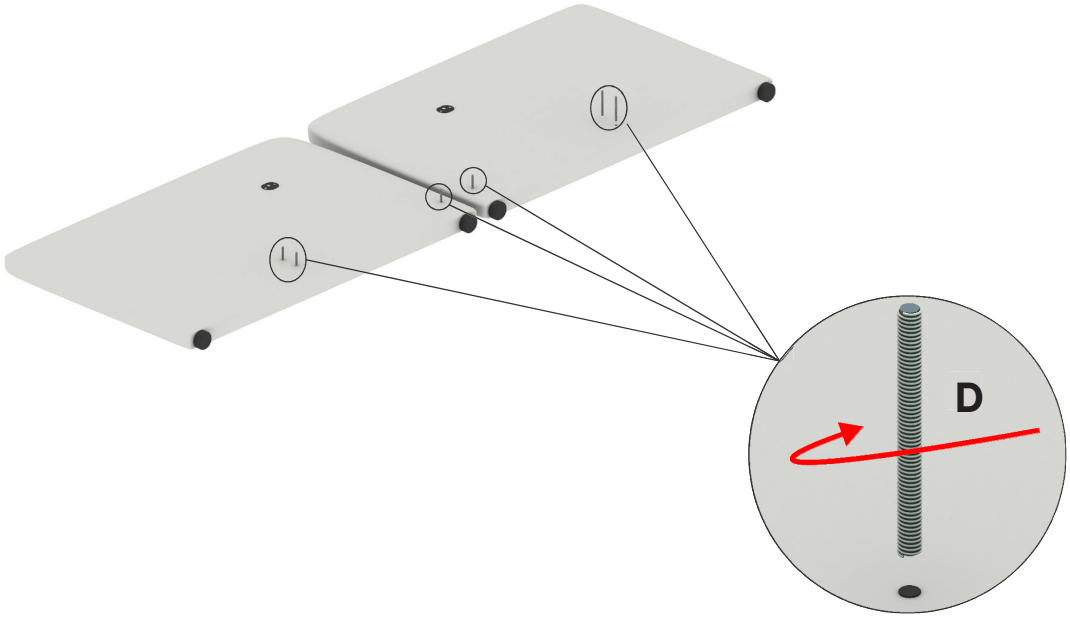

STEP 2

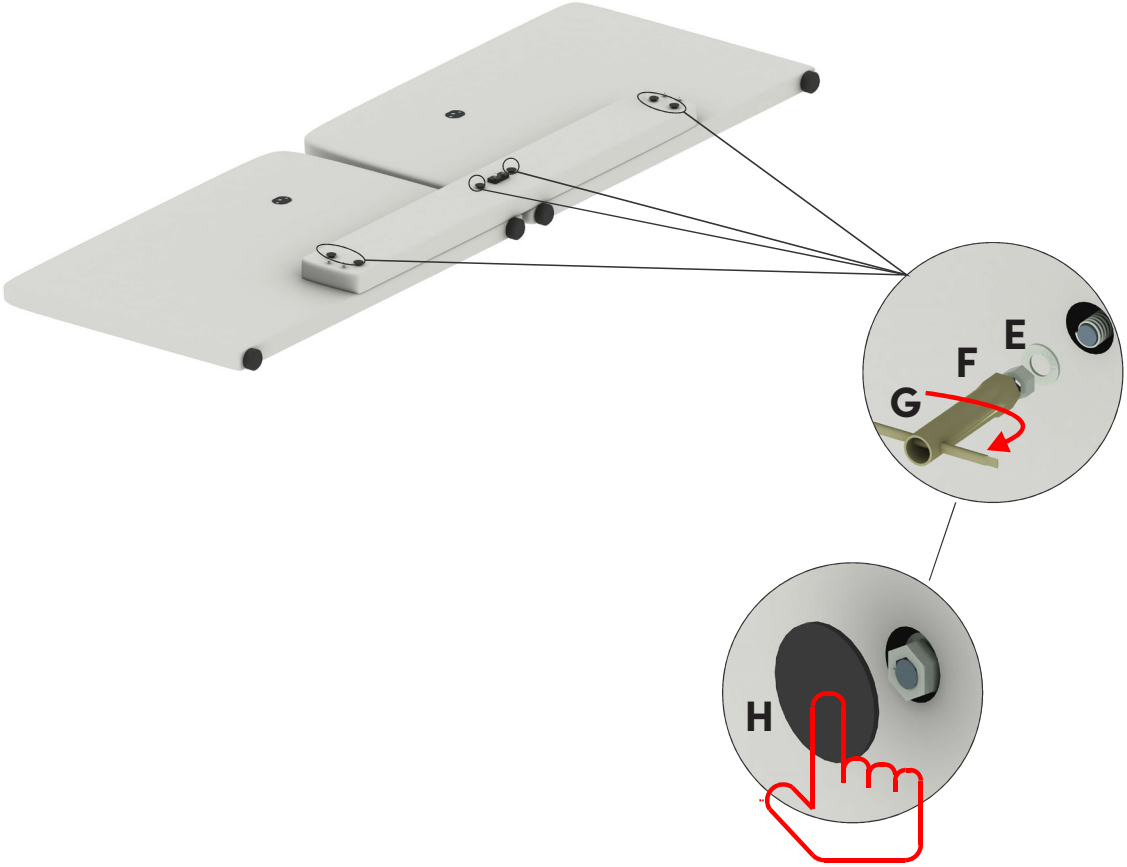

STEP 3

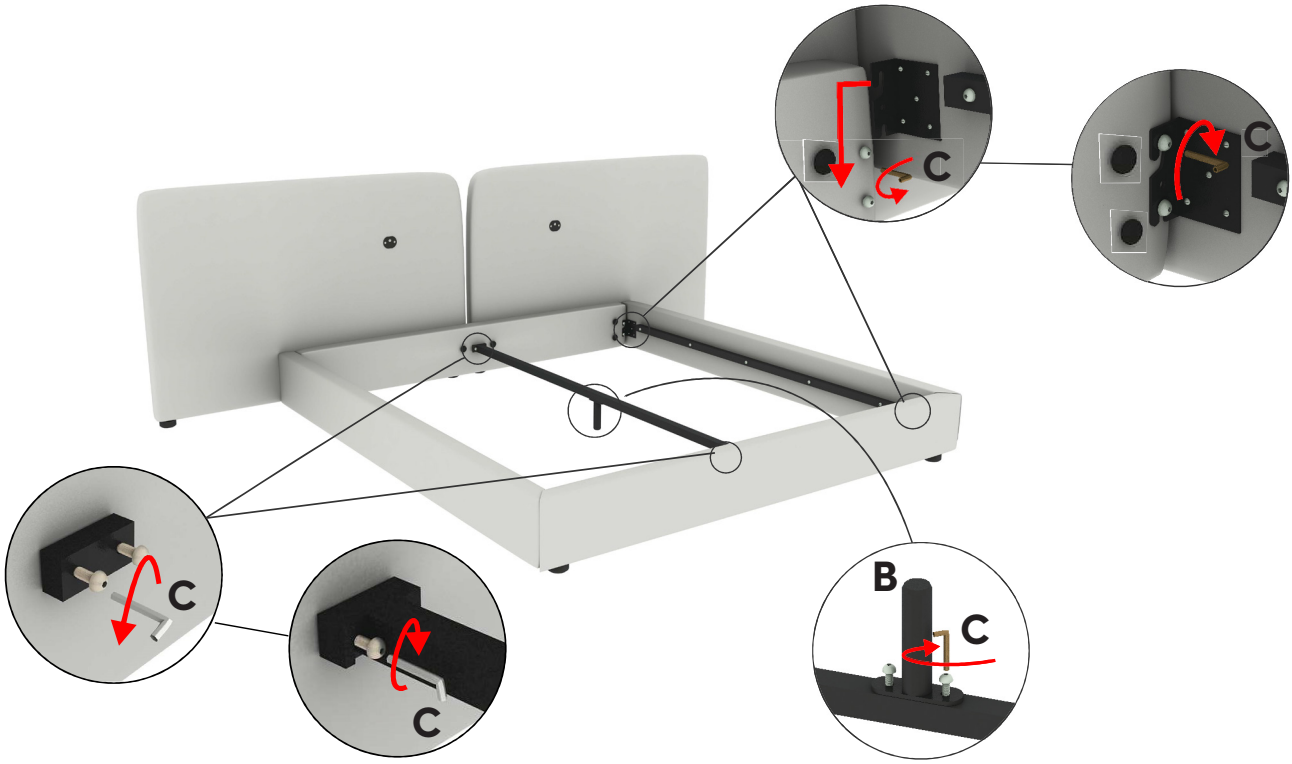

STEP 4

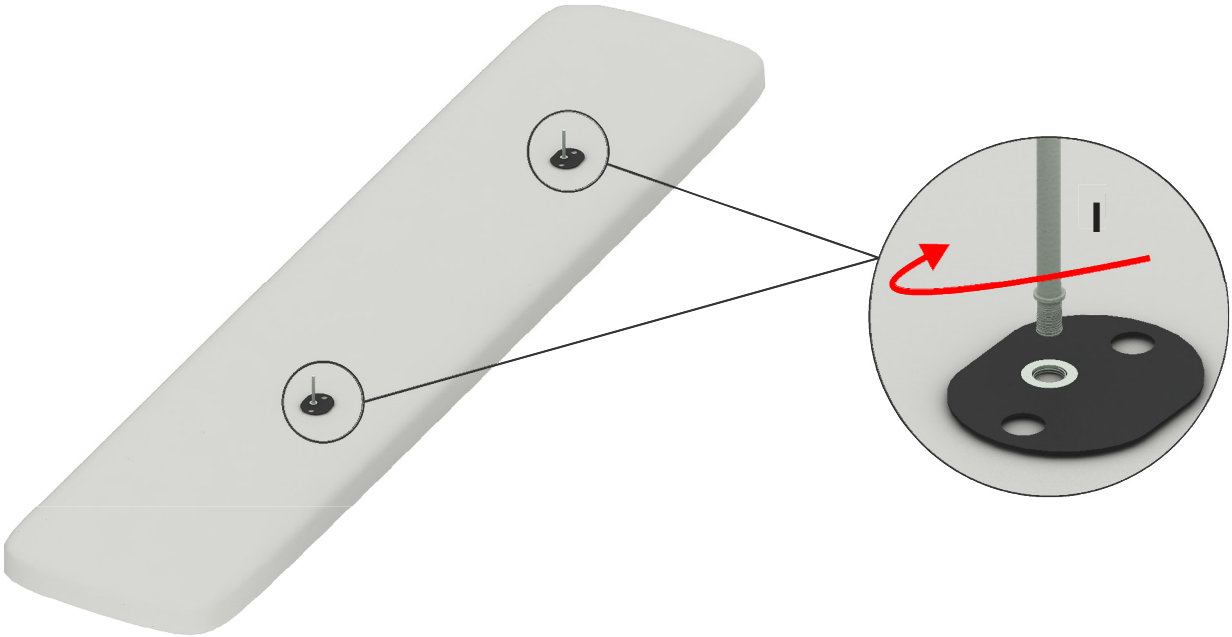

STEP 5

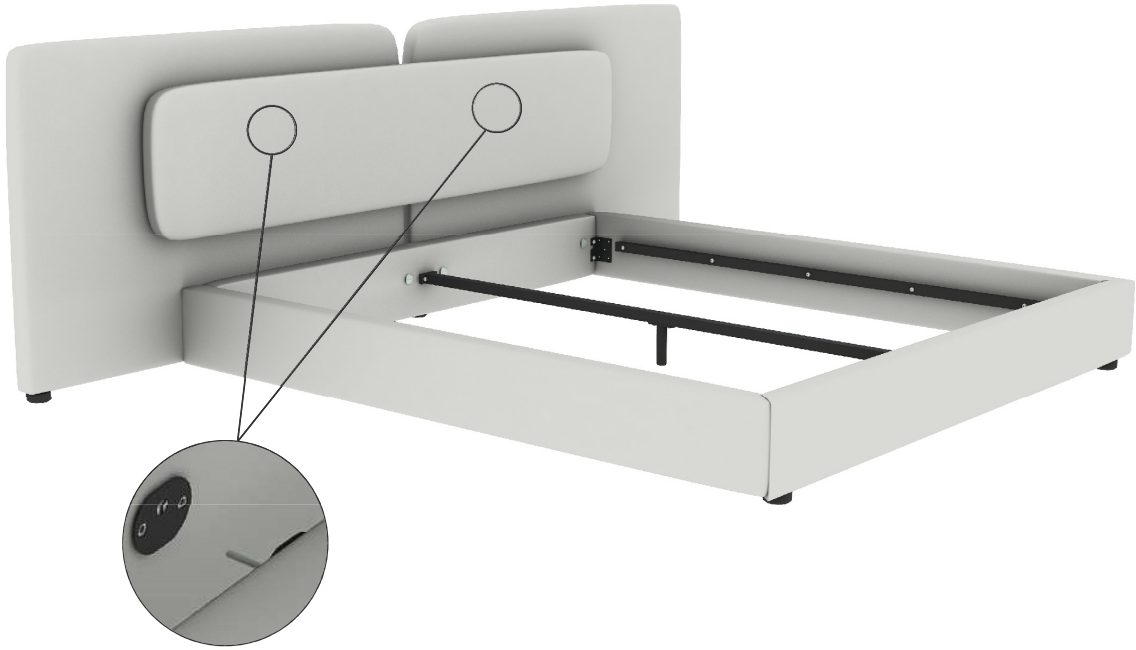
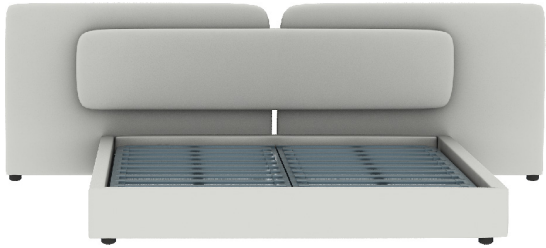
STEP 6