ROVECONCEPTS

Refined Luxury Living

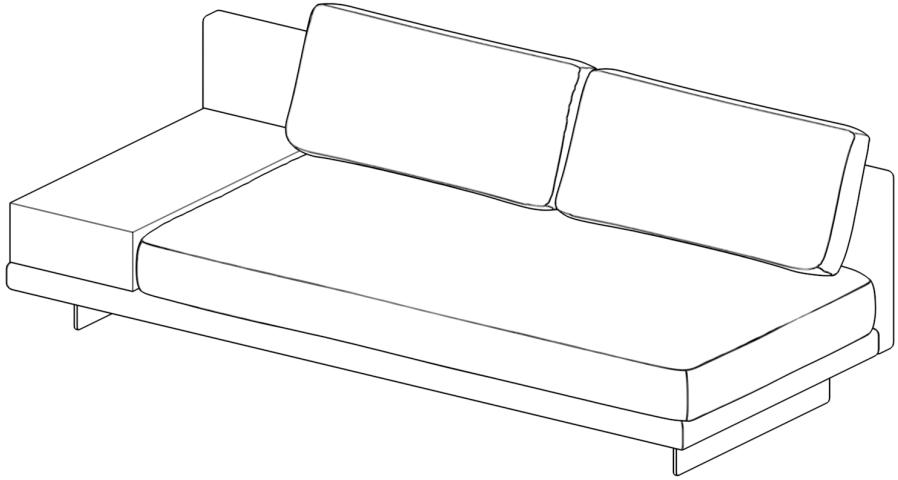

DRESDEN ARMLESS SOFA
ASSEMBLY INSTRUCTIONS

HARDWARE

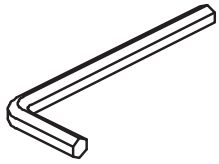

A

x1
M5

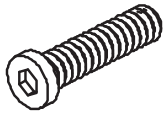

B

x8
M8*25

C

x8
ø17* ø10*2

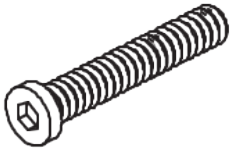

D

x2
M6*120

E

x2
ø13* ø6*1

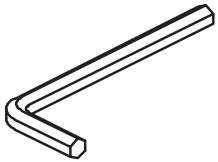

F

x1
M4

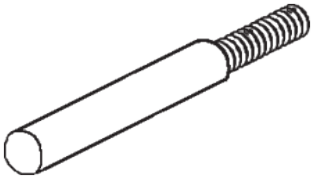

G

x1
Support Leg

STEP 1

Assembly is optional as the Dresden Side Table is weighted and will remain in place without having to secure with screws.

However, if you chose to assemble the Dresden Side Table add-on please make sure to align the screws to the pre-drilled holes.

Do not create new holes or force the screws if they are not aligned correctly to the pre-drilled holes. When screwing in the side table do not fully tighten the screws.

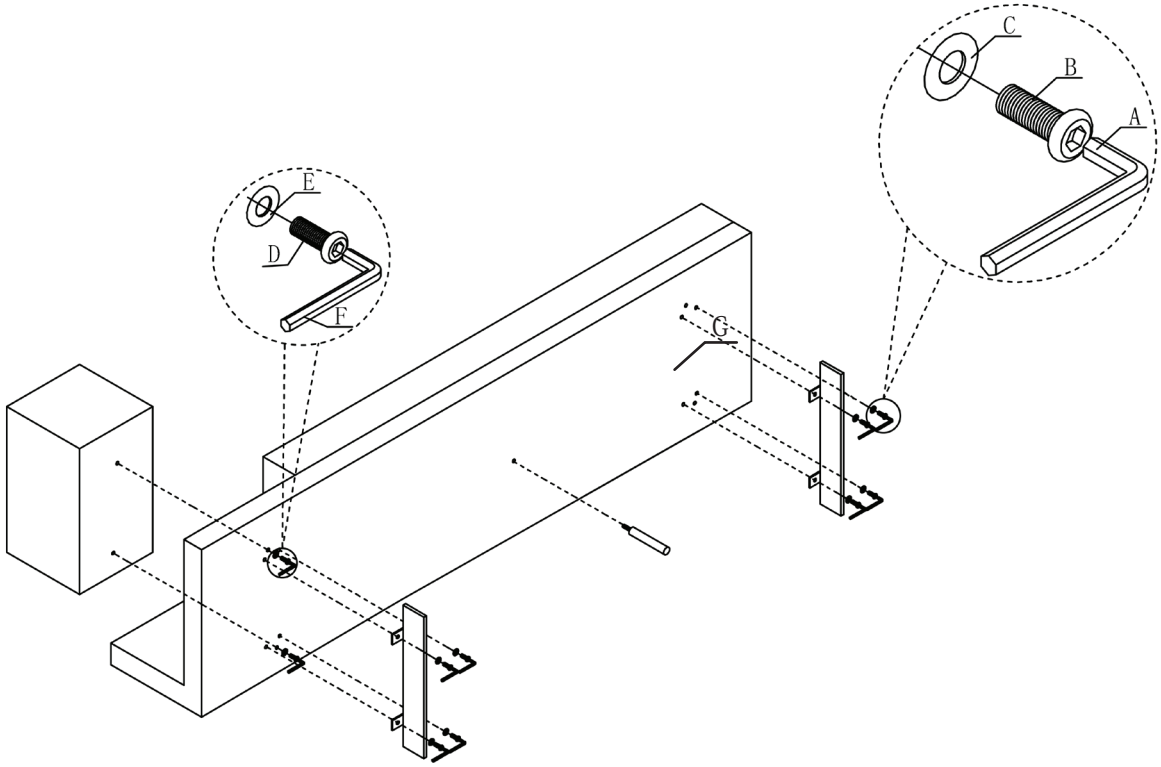

STEP 2

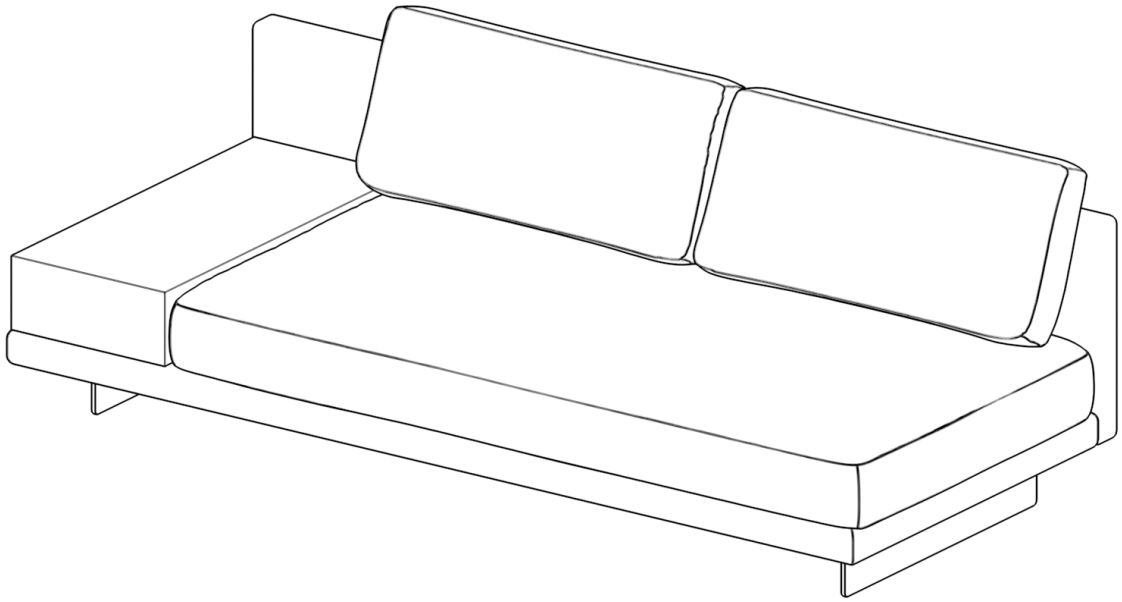

ROVECONCEPTS

Refined Luxury Living

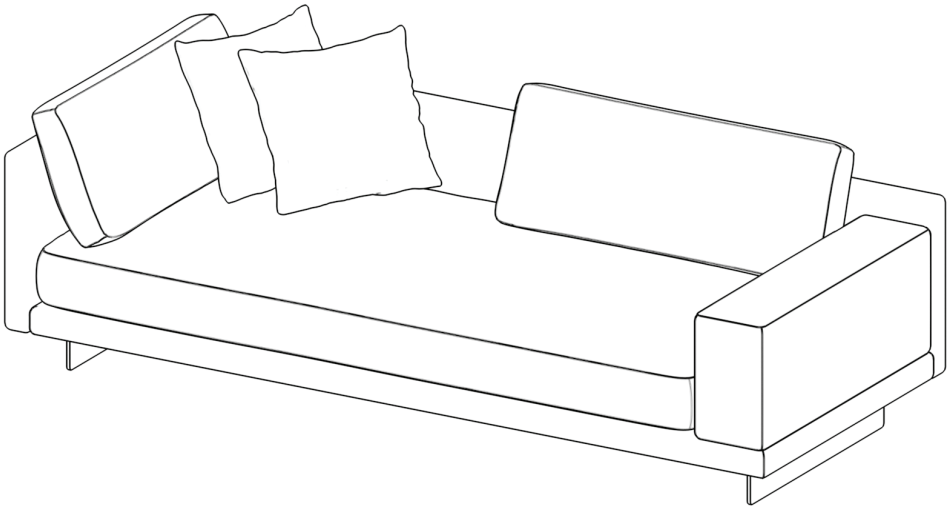

DRESDEN LEFT/RIGHT ARM SOFA
ASSEMBLY INSTRUCTIONS

HARDWARE

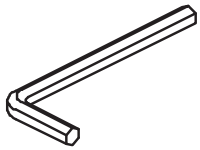

A

x1
M5

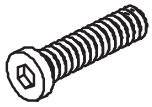

B

x8
M8*25

C

x8
ø17* ø10*2

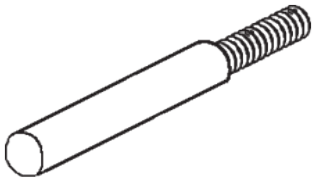

D

x1
Support Leg

STEP 1

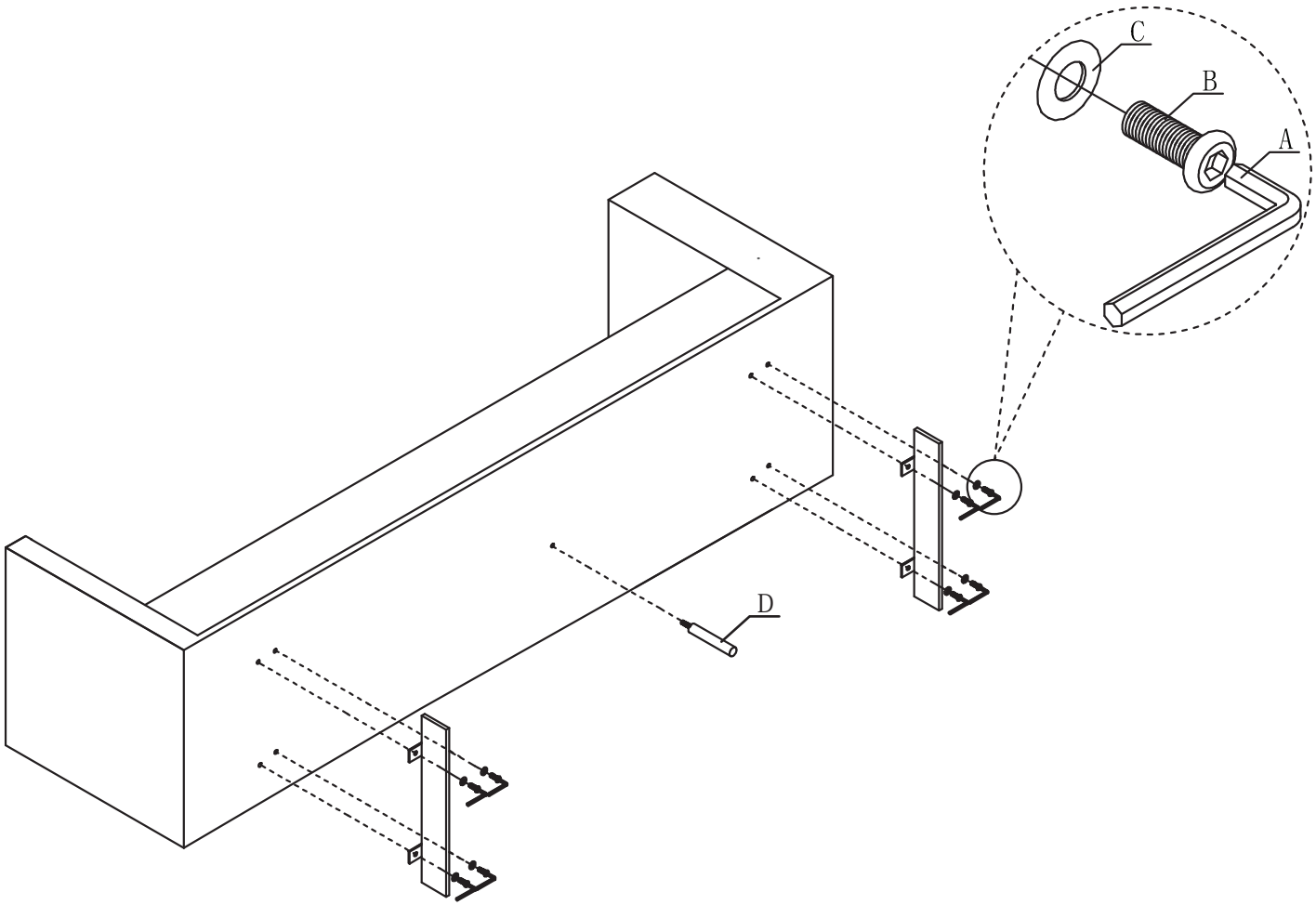

STEP 2

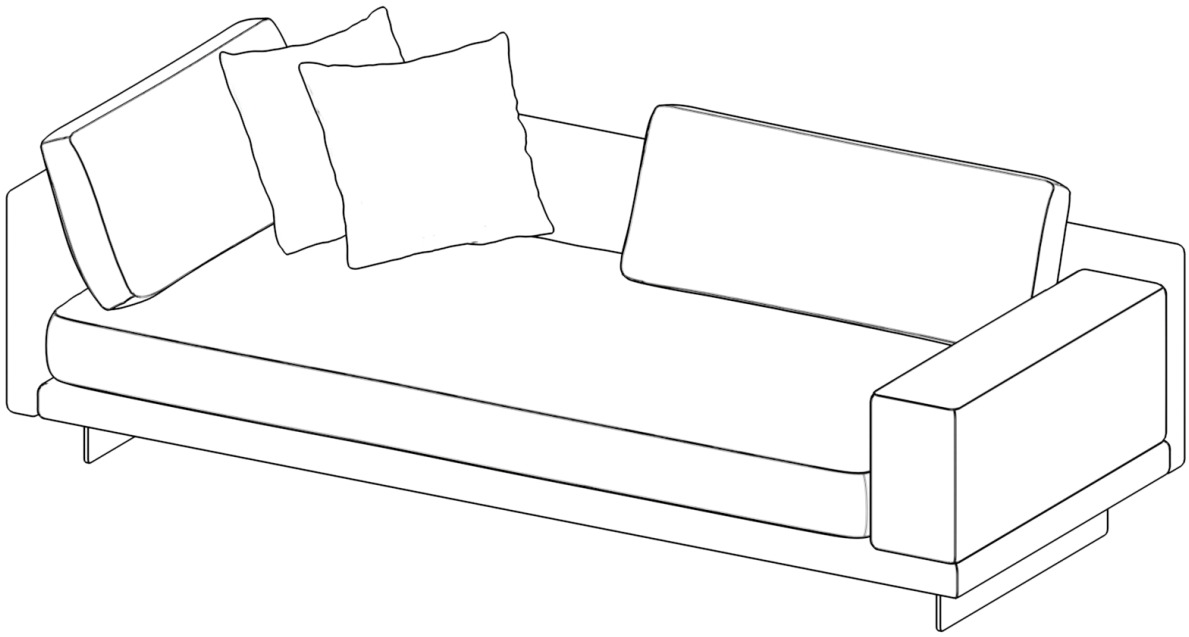

ROVECONCEPTS

Refined Luxury Living

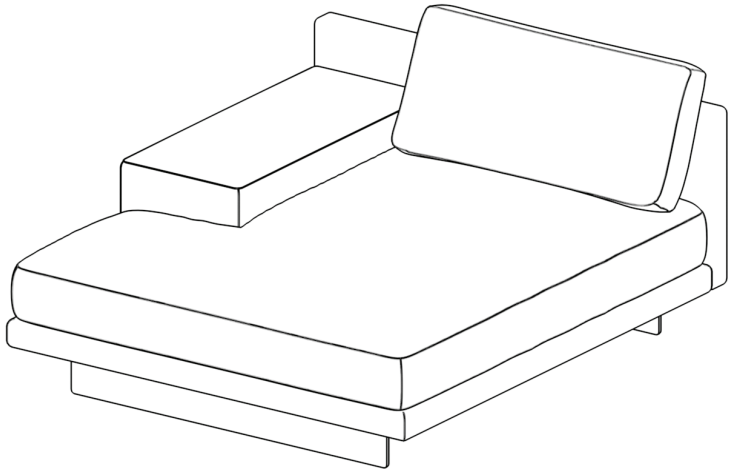

DRESDEN LEFT/RIGHT CHAISE WITH ARMREST

ASSEMBLY INSTRUCTIONS

HARDWARE

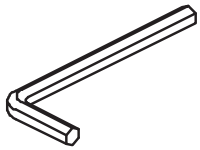

A

x1
M5

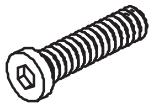

B

x8
M8*25

C

x8
ø17* ø10*2

STEP 1

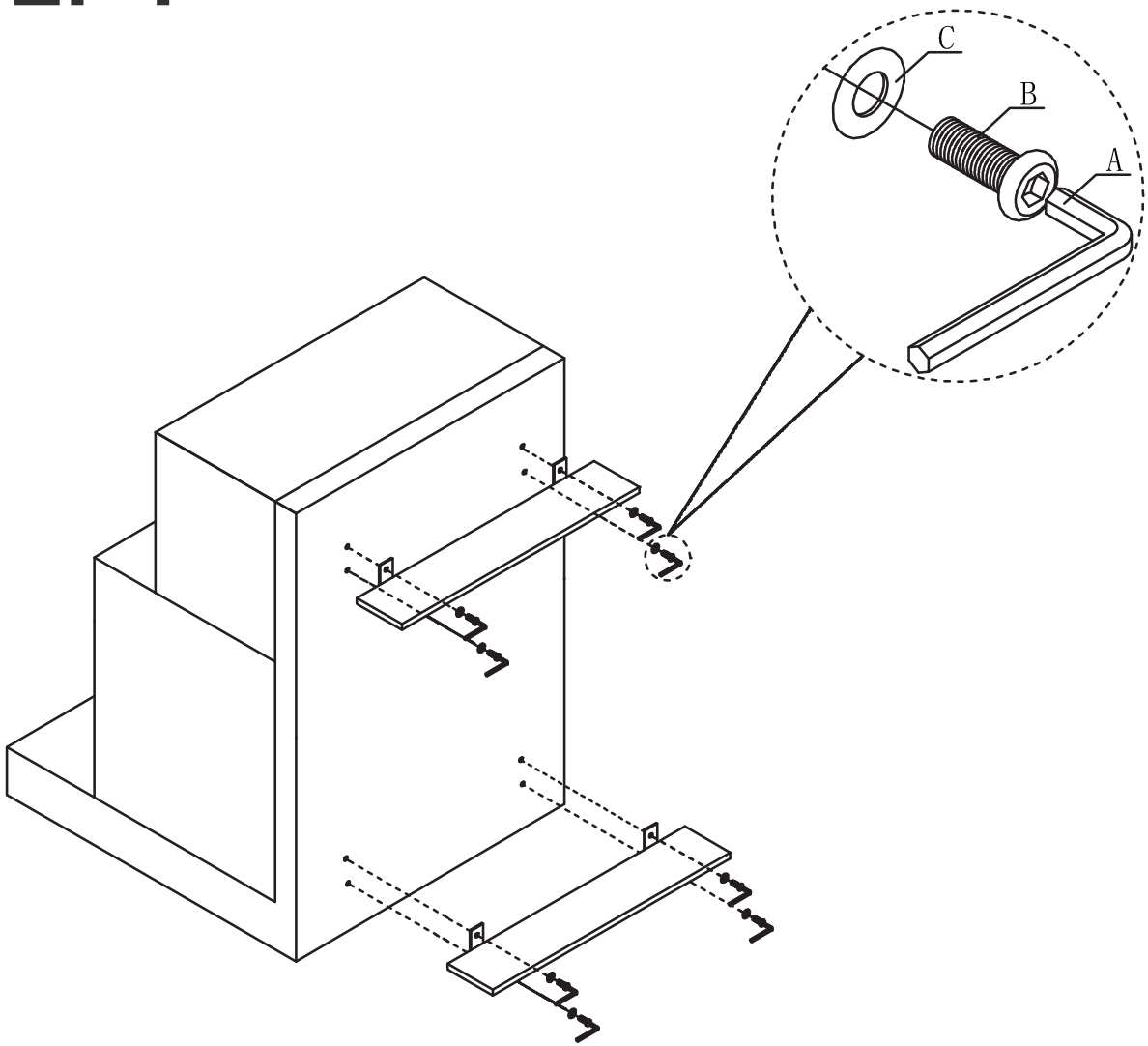
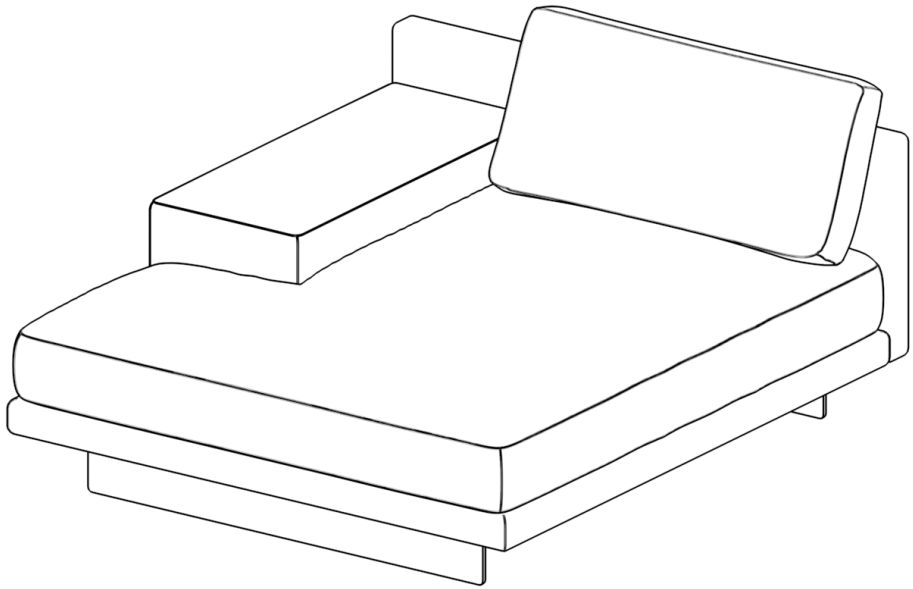
STEP 2