ROVECONCEPTS

Refined Luxury Living

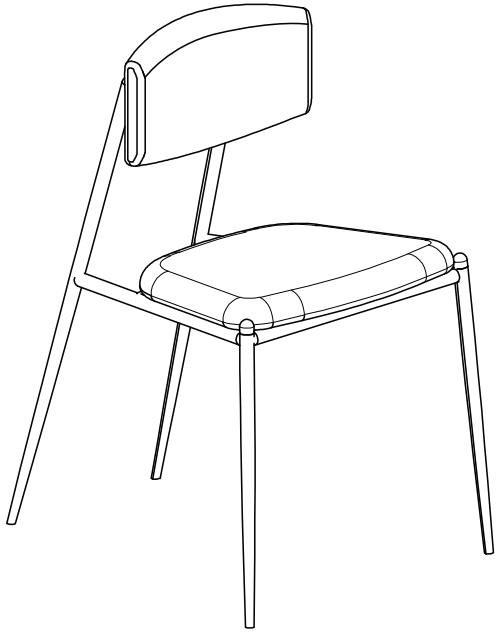

GENO DINING CHAIR ASSEMBLY INSTRUCTIONS

HARDWARE

A

x1

B

x1

C

x2

D

x4
M6*20

E

x1
M4

F

x4
Ø6*16

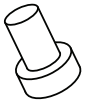

G

x4

STEP 1

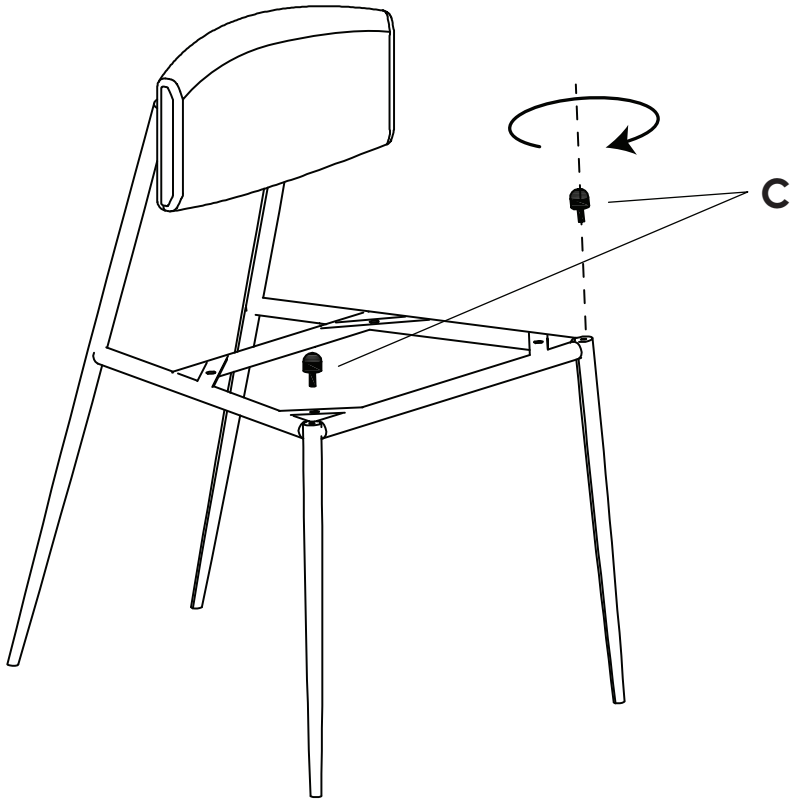

STEP 2

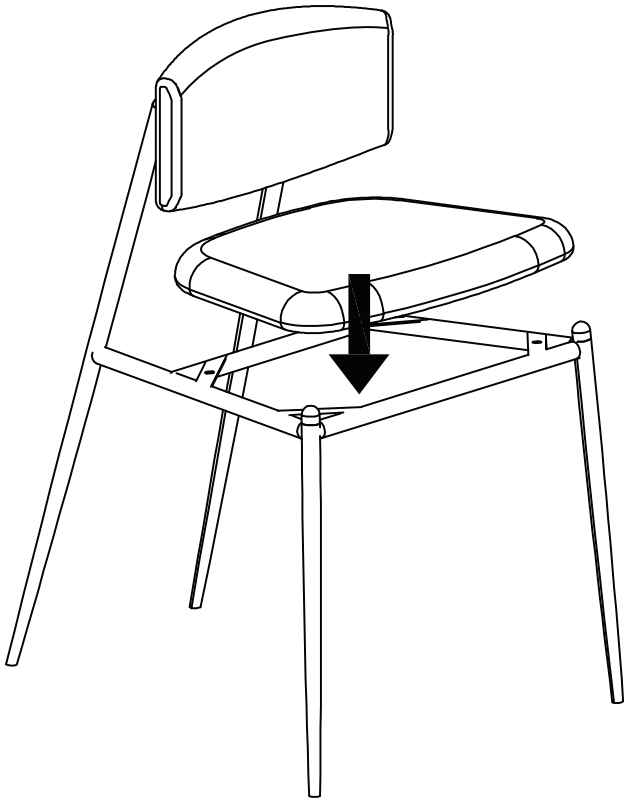
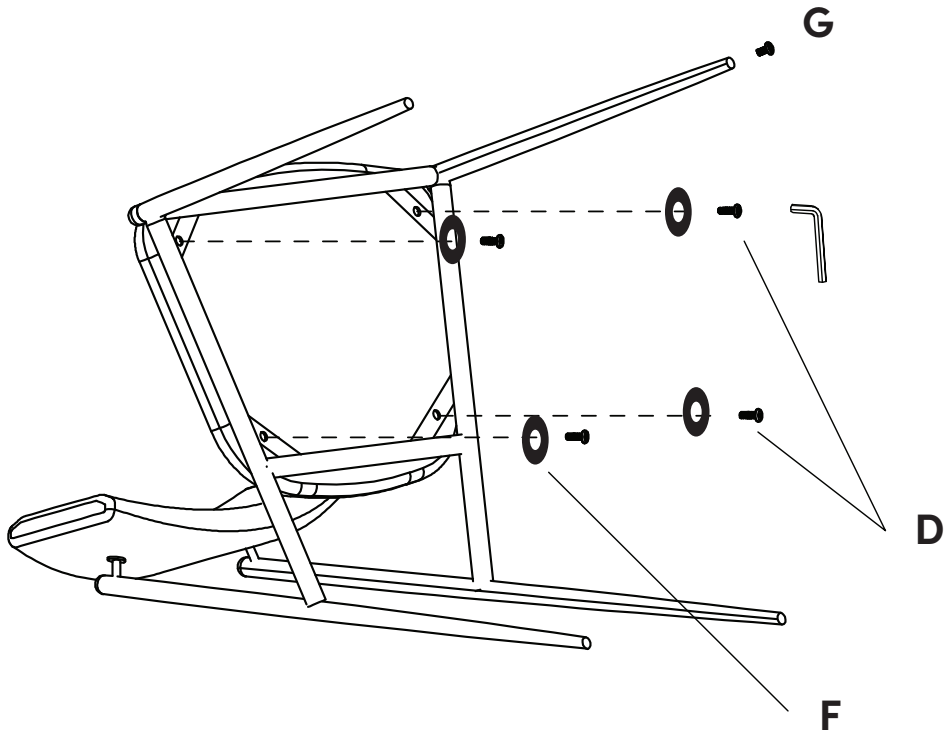
STEP 3