ROVECONCEPTS

Refined Luxury Living

IRIS CHAIR
ASSEMBLY INSTRUCTIONS

HARDWARE

A

B

C

x4
Ø18x1.2

D

x4
M6x20

E

x1
M4

F

x4

STEP 1

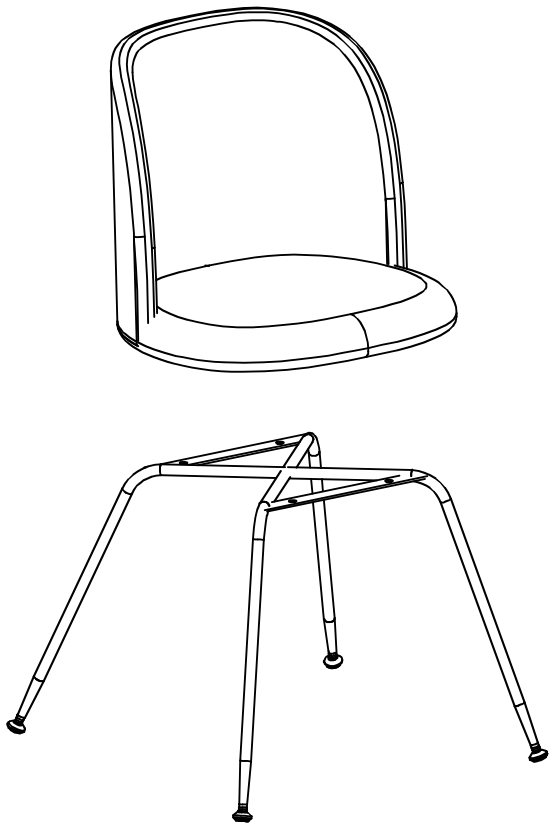

STEP 2

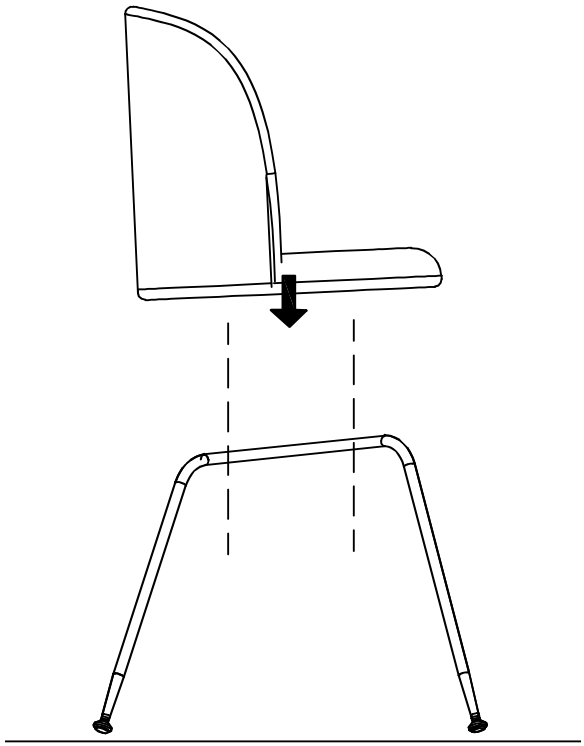
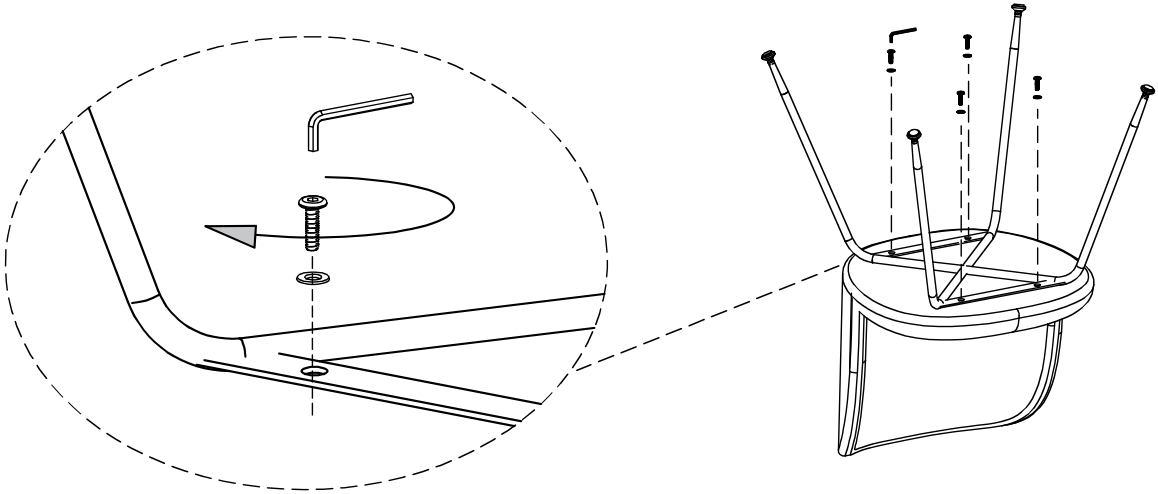
STEP 3